TEKSAN

The Rising Energy into the Darkness

Lighting Towers

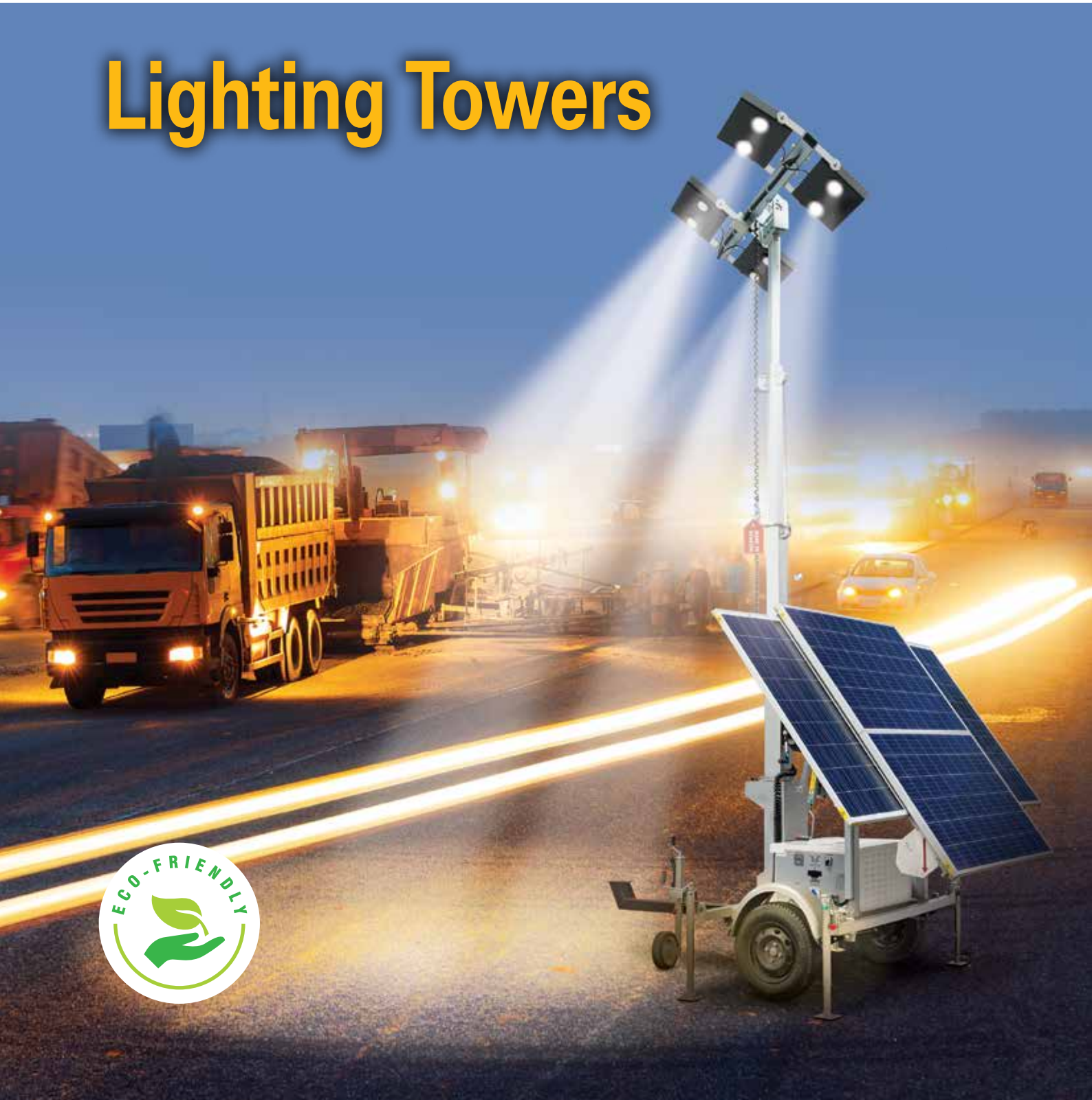

Diesel, Solar lighting towers provide perfect lighting in infrastructure and superstructure projects with their low operating costs, easy maintenance, and service facilities.

PRACTICAL → EFFICIENT & ECONOMIC → COMPACT → LIGHTER → DURABLE

- Diesel & Solar options,
- Easy installation,
- Fully modular system including improved transportation options,
- Energy storage and management in Solar Lighting towers,
- Solar Panels with adjustable angles,
- Daylight sensitive automatic operation system for solar lighting towers,
- Telescopic BOM system with 340° rotation feature,
- Super quiet canopy in accordance with customer's request,
- Easy maintenance possibility,
- Demountable drawbar.

DIESEL LIGHTING TOWER

TJ5MS-LM-1

TEKSAN

Output Power

Standby Power (ESP)	kVA	5
	kW	5
Prime Power (PRP)	kVA	4
	kW	4

LED (Lm)
4x24.000

MAST HEIGHT (m)
MECHANICAL
6

Engine

Manufacturer		MITSUBISHI
Model		MVL3E-61SD-NP2
Cylinder Configuration		in-line
No of Cylinder		3
Displacement	lt	0,952
Bore	mm	76
Stroke	mm	70
Compression Ratio		23:1
Aspiration		Naturally Aspirated
Governor Type		Mechanic
Cooling System		Water
Coolant Capacity	lt	1,8
Lubrication Oil Capacity	lt	4,7
Electrical System	Vdc	12
Speed / Frequency 50 Hz	rpm	1500 rpm / 50 Hz
Engine Gross Power (Standby 50 Hz)	kW	7,3
Fuel Consumption 110% PRP 50 Hz	lt/h	2,6
Fuel Consumption 100% PRP 50 Hz	lt/h	2,2
Fuel Consumption 75% PRP 50 Hz	lt/h	1,7
Fuel Consumption 50% PRP 50 Hz	lt/h	1,2
Exhaust Outlet Temperature 50 Hz	°C	550
Exhaust Gas Flow 50 Hz	m³/min	1,8
Combustion Air Flow	m³/min	0,7
Cooling Air Flow 50 Hz	m³/min	31

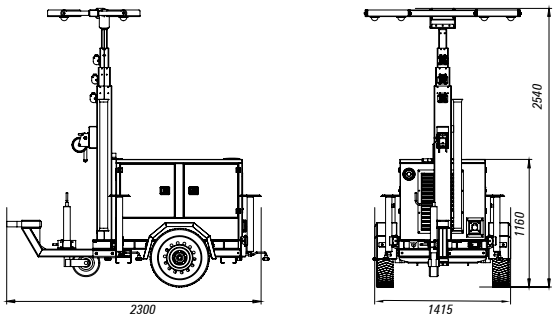

Transportation Mode Dimensions-mm

Alternator

No of Phase		1
Power Factor	pf	1
No of Bearings		1
No of Poles		4
Insulation Class		H
Degree of Protection		IP 20
Excitation System		Brushless with Capacitor

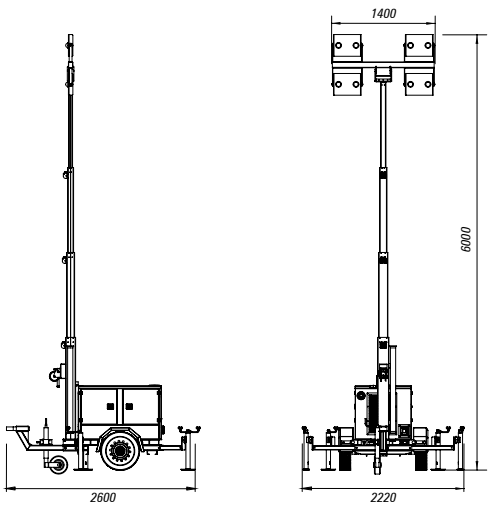

Working Mode Dimensions-mm

Size

	W x L x H (mm)	Weight (kg)	Fuel Tank (lt)	Noise dB(A) @7m
Canopied	1420 x 2315 x 2510	675	15	65

SLT-8 LFP

General Specifications

Automatic – Manual Control		Standard
Automatic Control Method		Daylight Sensor
Deep Discharge Protection		Standard
Tower Height Control		Manual
Tower Position Control (east – west)		Manual
LED Position Control		Manual
Log Recording		Optional
Remote Monitoring		Optional
Inverter		Optional

LED (Lm)
4x24.000

MAST HEIGHT (m)
MECHANICAL
6

System Specifications

System Lighting Load (LED qty)	W	600 (4 x 150)
Solar Capacity (PV qty)	Wp	1000 (2 x 500)
Total Luminous Flux	lm	96000 (4 x 24000)
System Voltage	VDC	48
Battery Capacity (@C20)	Ah	150
Nominal Charge Current	A	30
Nominal Charge Voltage	VDC	54
Auxiliary Charge Voltage	VAC	230
Auxiliary Charge Current	A	17,4
Auxiliary Charge Power	W	1000
AC Output Voltage (OPTIONAL)	VAC	230
AC Output Frequency (OPTIONAL)	Hz	50
AC Output Power (OPTIONAL)	VA	up to 3000
Tilt Angle	degree	30
Tower Height	m	6

Battery Specifications

Battery Technology		LiFePO4
Capacity	Ah	150
Nominal Voltage	VDC	48
Depth of Discharge (DOD)	%	80
Cycle Life (@25°C & %80 DoD)		5000
Design Life	years	15
Recommended Charge Current	A	30
Maximum Discharge Current	A	100
Operating Temperature Ranges		Discharge: -20°C~60°C
		Charge: 0°C~55°C
		Storage: -20°C~60°C
Maintenance		Free

Solar Charger Specifications

Nominal Output Voltage	VDC	48
Maximum PV Open Circuit Voltage	VDC	150
Maximum PV Short Circuit Current	A	40
Nominal Charge Current	A	35
Charge Voltage "absorption"	VDC	57,6 (adjustable)
Charge Voltage "float"	VDC	55,2 (adjustable)
Nominal PV Power	W	2000
Maximum Efficiency	%	98
Operating Temperature Rates		-30°C~60°C

Auxiliary Charger Specifications

Nominal Output Voltage	VDC	48
Input Voltage Range	VAC	90~264
Frequency Range	Hz	47~63
Nominal Charge Current	A	17,4
Charge Voltage "absorption"	VDC	57,6 (adjustable)
Charge Voltage "float"	VDC	55,2 (adjustable)
Maximum Efficiency	%	98
Operating Temperature Rates		-20°C~60°C

Performance Parameters

Battery Discharge Time	hours	8
Cycle Per Day	qty	1/1,5
Expected Battery Lifetime (with 1,5 daily battery cycle @ %80 DoD & 25°C ambient)	years	9
Illuminated Area (Average 20 lux)	m^2	3500

Size

	W x L x H (mm)	Weight (kg)
Transportation Mode	2180 x 3679 x 2930	1254 kg
Operation Mode	4201 x 4041 x 6000	1254 kg

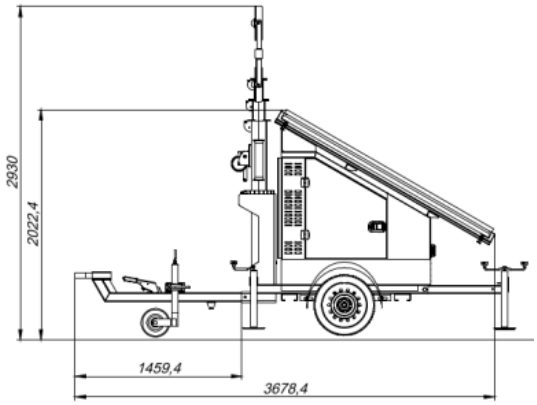

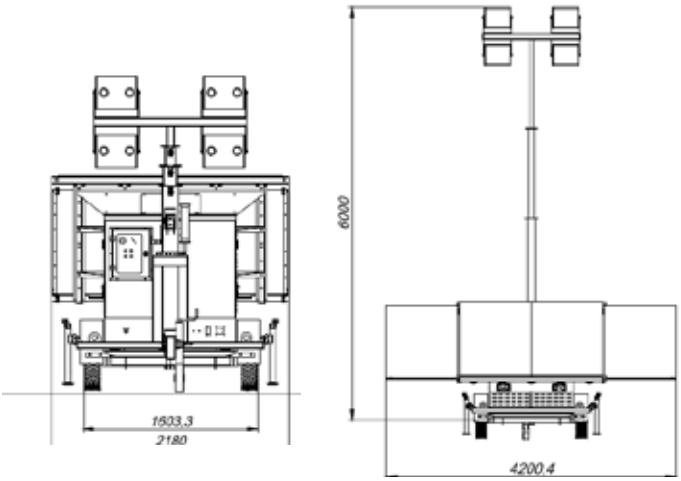

SLT-8 LC

General Specifications

Automatic – Manual Control		Standard
Automatic Control Method		Daylight Sensor
Deep Discharge Protection		Standard
Tower Height Control		Manual
Tower Position Control (east – west)		Manual
LED Position Control		Manual
Log Recording		Optional
Remote Monitoring		Optional
Inverter		Optional

LED (Lm)
4x24.000

MAST HEIGHT (m)
MECHANICAL
6

System Specifications

System Lighting Load (LED qty)	W	600 (4 x 150)
Solar Capacity (PV qty)	Wp	1000 (2 x 500W)
Total Luminous Flux	lm	96000 (4 x 24000)
System Voltage	VDC	48
Battery Capacity (@C20)	Ah	150
Nominal Charge Current	A	30
Nominal Charge Voltage	VDC	57,6
Auxiliary Charge Voltage	VAC	230
Auxiliary Charge Current	A	17,4
Auxiliary Charge Power	W	1000
AC Output Voltage (OPTIONAL)	VAC	230
AC Output Frequency (OPTIONAL)	Hz	50
AC Output Power (OPTIONAL)	VA	up to 3000
Tilt Angle	degree	30
Tower Height	m	6

Battery Specifications

Battery Technology		Lead Carbon
Capacity	Ah	150
Nominal Voltage	VDC	12
Depth of Discharge (DOD)	%	80
Cycle Life (@25°C & %80 DoD)		2000
Design Life	years	15
Recommended Charge Current	A	30
Maximum Discharge Current	A	1500
Operating Temperature Ranges		Discharge: -20°C~60°C
		Charge: 0°C~50°C
		Storage: -20°C~60°C
Maintenance		Free

Solar Charger Specifications

Nominal Output Voltage	VDC	48
Maximum PV Open Circuit Voltage	VDC	150
Maximum PV Short Circuit Current	A	40
Nominal Charge Current	A	35
Charge Voltage “absorption”	VDC	57,6 (adjustable)
Charge Voltage “float”	VDC	55,2 (adjustable)
Nominal PV Power	W	2000
Maximum Efficiency	%	98
Operating Temperature Rates		-30°C～60°C

Auxiliary Charger Specifications

Nominal Output Voltage	VDC	48
Input Voltage Range	VAC	90～264
Frequency Range	Hz	47～63
Nominal Charge Current	A	17,4
Charge Voltage “absorption”	VDC	57,6 (adjustable)
Charge Voltage “float”	VDC	55,2 (adjustable)
Maximum Efficiency	%	98
Operating Temperature Rates		-20°C～60°C

Performance Parameters

Battery Discharge Time	hours	8
Cycle Per Day	qty	1/1,5
Expected Battery Lifetime (with 1,5 daily battery cycle @ %80 DoD & 25°C ambient)	years	3,7
Illuminated Area (Average 20 lux)	m^2	3500

Size

	W x L x H (mm)	Weight (kg)
Transportation Mode	2180 x 3679 x 2930	1372 kg
Operation Mode	4201 x 4041 x 6000	1372 kg

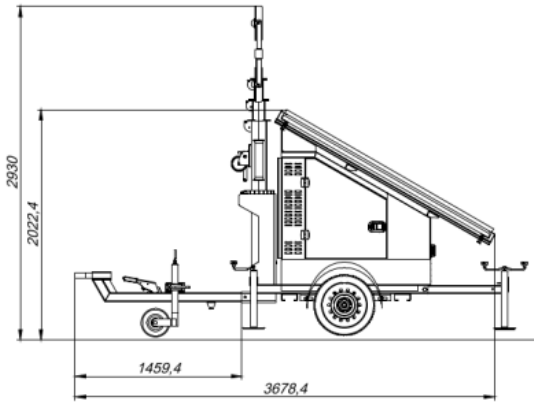

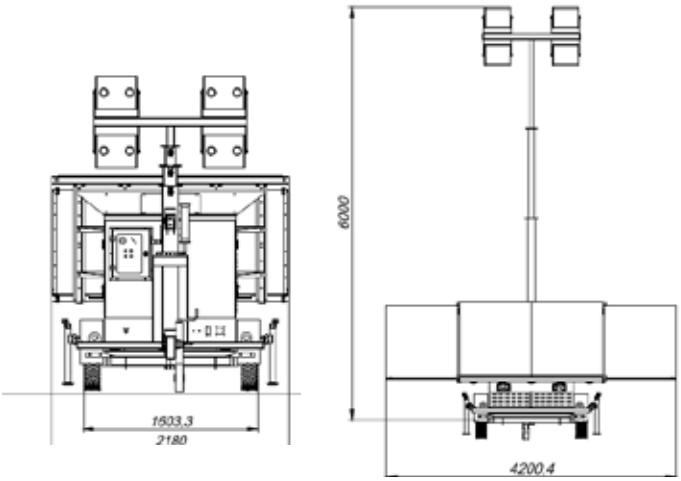

SLT-12_LFP

General Specifications

Automatic – Manual Control		Standard
Automatic Control Method		Daylight Sensor
Deep Discharge Protection		Standard
Tower Height Control		Manual
Tower Position Control (east – west)		Manual
LED Position Control		Manual
Log Recording		Optional
Remote Monitoring		Optional
Inverter		Optional

LED (Lm)
4x24.000

MAST HEIGHT (m)
MECHANICAL
6

System Specifications

System Lighting Load (LED qty)	W	600 (4 x 150)
Solar Capacity (PV qty)	Wp	1800 (4 x 450)
Total Luminous Flux	lm	96000 (4 x 24000)
System Voltage	VDC	48
Battery Capacity (@C20)	Ah	200
Nominal Charge Current	A	40
Nominal Charge Voltage	VDC	54
Auxiliary Charge Voltage	VAC	230
Auxiliary Charge Current	A	17,4
Auxiliary Charge Power	W	1000
AC Output Voltage (OPTIONAL)	VAC	230
AC Output Frequency (OPTIONAL)	Hz	50
AC Output Power (OPTIONAL)	VA	up to 3000
Tilt Angle	degree	30
Tower Height	m	6

Battery Specifications

Battery Technology		LiFePO4
Capacity	Ah	100
Nominal Voltage	VDC	48
Depth of Discharge (DOD)	%	80
Cycle Life (@25°C & %80 DoD)		5000
Design Life	years	10
Recommended Charge Current	A	20
Maximum Discharge Current	A	200
Operating Temperature Ranges		Discharge: -10°C~55°C
		Charge: 0°C~55°C
		Storage: -10°C~45°C
Maintenance		Free

Solar Charger Specifications

Nominal Output Voltage	VDC	48
Maximum PV Open Circuit Voltage	VDC	150
Maximum PV Short Circuit Current	A	40
Nominal Charge Current	A	35
Charge Voltage "absorption"	VDC	57,6 (adjustable)
Charge Voltage "float"	VDC	55,2 (adjustable)
Nominal PV Power	W	2000
Maximum Efficiency	%	98
Operating Temperature Rates		-30°C~60°C

Auxiliary Charger Specifications

Nominal Output Voltage	VDC	48
Input Voltage Range	VAC	90~264
Frequency Range	Hz	47~63
Nominal Charge Current	A	17,4
Charge Voltage "absorption"	VDC	57,6 (adjustable)
Charge Voltage "float"	VDC	55,2 (adjustable)
Maximum Efficiency	%	98
Operating Temperature Rates		-20°C~60°C

Performance Parameters

Battery Discharge Time	hours	12
Cycle Per Day	qty	1/1,5
Expected Battery Lifetime (with 1,5 daily battery cycle @ %80 DoD & 25°C ambient)	years	9
Illuminated Area (Average 20 lux)	m^2	3500

Size

	W x L x H (mm)	Weight (kg)
Transportation Mode	2180 x 3679 x 2930	1326 kg
Operation Mode	4201 x 4041 x 6000	1326 kg

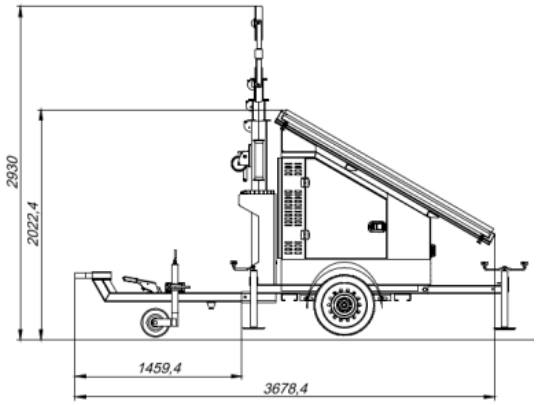

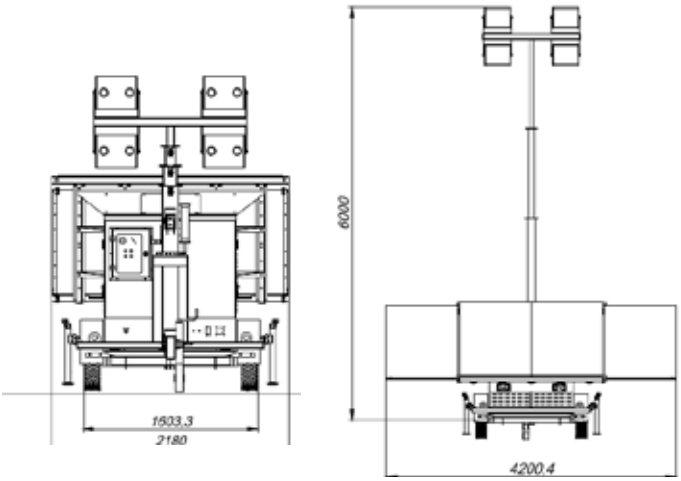

SLT-12_LC

General Specifications

Automatic – Manual Control		Standard
Automatic Control Method		Daylight Sensor
Deep Discharge Protection		Standard
Tower Height Control		Manual
Tower Position Control (east – west)		Manual
LED Position Control		Manual
Log Recording		Optional
Remote Monitoring		Optional
Inverter		Optional

LED (Lm)
4x24.000

MAST HEIGHT (m)
MECHANICAL
6

System Specifications

System Lighting Load (LED qty)	W	600 (4 x 150)
Solar Capacity (PV qty)	Wp	1800 (4 x 450)
Total Luminous Flux	lm	96000 (4 x 24000)
System Voltage	VDC	48
Battery Capacity (@C20)	Ah	200
Nominal Charge Current	A	40
Nominal Charge Voltage	VDC	57,6
Auxiliary Charge Voltage	VAC	230
Auxiliary Charge Current	A	17,4
Auxiliary Charge Power	W	1000
AC Output Voltage (OPTIONAL)	VAC	230
AC Output Frequency (OPTIONAL)	Hz	50
AC Output Power (OPTIONAL)	VA	up to 3000
Tilt Angle	degree	30
Tower Height	m	6

Battery Specifications

Battery Technology		Lead Carbon
Capacity	Ah	200
Nominal Voltage	VDC	12
Depth of Discharge (DOD)	%	80
Cycle Life (@25°C & %80 DoD)		2000
Design Life	years	15
Recommended Charge Current	A	40
Maximum Discharge Current	A	2000
Operating Temperature Ranges		Discharge: -20°C~55°C
		Charge: 0°C~50°C
		Storage: -20°C~60°C
Maintenance		Free

Solar Charger Specifications

Nominal Output Voltage	VDC	48
Maximum PV Open Circuit Voltage	VDC	150
Maximum PV Short Circuit Current	A	40
Nominal Charge Current	A	35
Charge Voltage “absorption”	VDC	57,6 (adjustable)
Charge Voltage “float”	VDC	55,2 (adjustable)
Nominal PV Power	W	2000
Maximum Efficiency	%	98
Operating Temperature Rates		-30°C～60°C

Auxiliary Charger Specifications

Nominal Output Voltage	VDC	48
Input Voltage Range	VAC	90～264
Frequency Range	Hz	47～63
Nominal Charge Current	A	17,4
Charge Voltage “absorption”	VDC	57,6 (adjustable)
Charge Voltage “float”	VDC	55,2 (adjustable)
Maximum Efficiency	%	98
Operating Temperature Rates		-20°C～60°C

Performance Parameters

Battery Discharge Time	hours	12
Cycle Per Day	qty	1/1,5
Expected Battery Lifetime (with 1,5 daily battery cycle @ %80 DoD & 25°C ambient)	years	3,7
Illuminated Area (Average 20 lux)	m^2	3500

Size

	W x L x H (mm)	Weight (kg)
Transportation Mode	2180 x 3679 x 2930	1492 kg
Operation Mode	4201 x 4041 x 6000	1492 kg

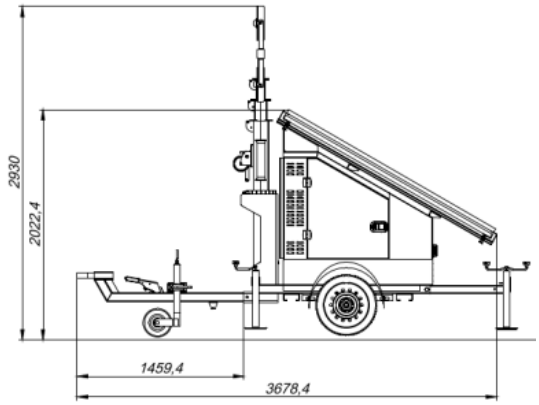

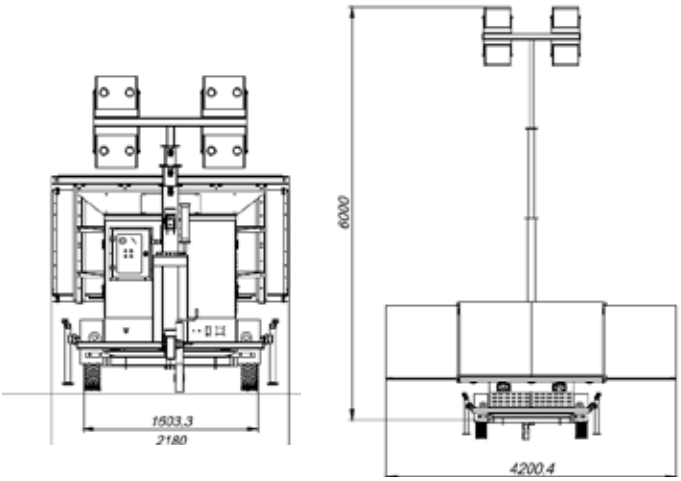

WE ARE YOUR EVERLASTING COMPANY

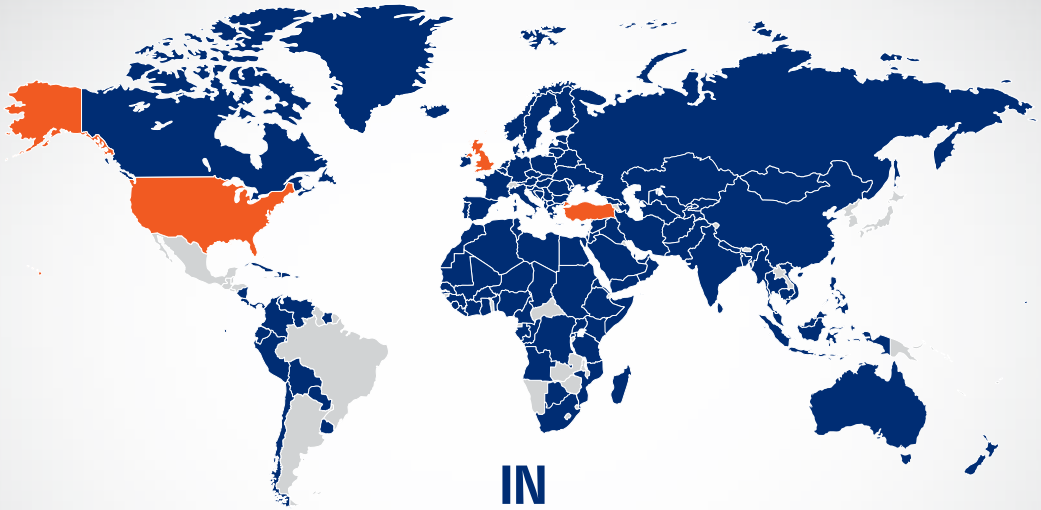

IN

140+

COUNTRIES

+90 444 8576 | www.teksan.com
info@teksan.com

TEKSAN